Laser devices / data transmission– and barcode positioning-systems 8

8.1 Explanatory notes 8-3
8.2 Functional description 8-4
8.3 Applications 8-5
8.4 Assembly instructions 8-5

Series LE-100 ..... INFO

Synchronous-Serial (**SSI**) TR-VLE-TI-GB-0060
INTERBUS-S (**IBS**) TR-VLE-TI-GB-0070
DeviceNet TR-VLE-TI-GB-0080
CANopen TR-VLE-TI-GB-0090
PROFIBUS-DP according to PNO profile CLASS2 ..... TR-VLE-TI-GB-0100

Series LE-200 ..... INFO

Synchronous-Serial (**SSI**) TR-VLE-TI-GB-0105
PROFIBUS-DP according to PNO profile CLASS2 with SSI TR-VLE-TI-GB-0110
INTERBUS-S (**IBS**) TR-VLE-TI-GB-0120
DeviceNet TR-VLE-TI-GB-0125
CANopen TR-VLE-TI-GB-0130

Optical data transmission systems ..... INFO

OD-2M TR-VOD-TI-GB-0010
OD-500 ..... TR-VOD-TI-GB-0020
ID-200 ..... TR-VOD-TI-GB-0030

Barcode positioning systems BE-90 ..... INFO

Synchronous-Serial (**SSI**) TR-VBE-TI-GB-0010
PROFIBUS-DP TR-VBE-TI-GB-0020

8 Linear-absolute laser measuring devices

8.1 Explanatory notes

The various models of the laser measuring device series described in this section all comply with the mechanical, electrical and connection specifications of the TR standard. For special versions differing from the data sheets, please consult the sales department.

Series definition

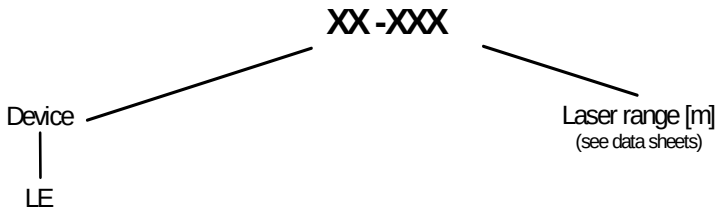

Device

LE: Linear-absolute laser measuring device

Linear-absolute position measuring system for measuring lengths of up to a maximum of 170 m. If the distance between the measuring device and reflector is changed in the de-energized state, the current position is indicated as soon as the supply voltage is switched on again. The LE system is a contactless, non-wearing system.

8.2 Functional description

The LE-series laser measuring devices are optical sensors for contactless measurement of the distance between the sensor and a reflector.

For this purpose, the measuring device or reflector is attached to the moving object and the reflector/sensor to the fixed remote station in such a way that the reflector always remains within the visual field of the sensor.

The laser diode inside the device emits a beam which bounces back off the reflector and is re-received by a detector also housed inside the measuring device. The phase angle of the received signal in relation to the transmitted signal is the measure of distance. The absolute distance value thus obtained is then transferred to the control system via the interface.

Laser measuring devices can be configured as required using the programming software EPROG or TRWinProg. Programmable parameters include resolution, data format, data word coding, presettings, limit switches, signal bits and switching outputs.

In addition, the measuring devices have a switching output which monitors the correctness of the measured value.

Sketch:

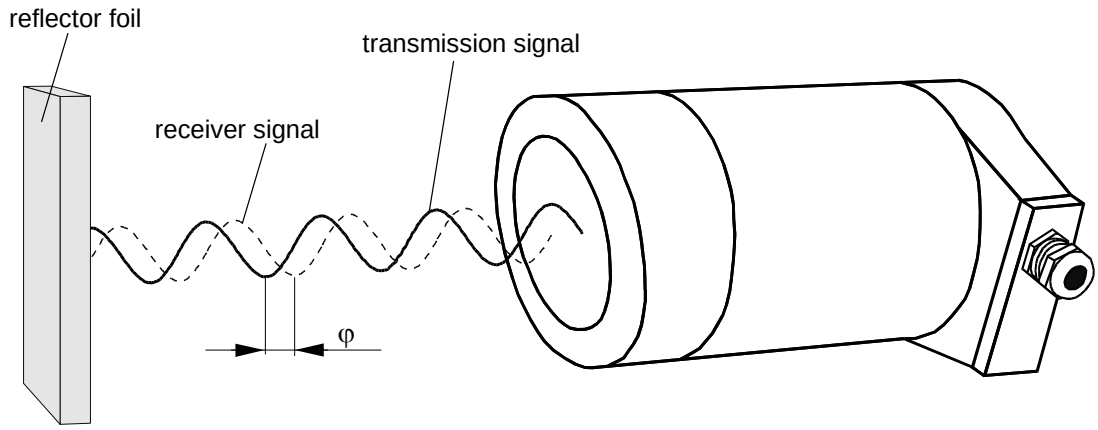

φ = Phase displacement
d = Distance

d = f (φ)

8.3 Applications

Linear movements are recorded directly and converted to electrical information which can be fed to subsequent units such as displays, controllers and computers for further processing.

Different interface modules allow connection to interfaces for standard PLC or NC controllers or industrial PCs.

Examples of typical applications of laser measuring devices:

- Machine tools or transfer machines
- Handling systems
- Warehouse storage and retrieval equipment
- Cranes
- etc.

8.4 Assembly instructions

Aligning the laser measuring device

The measuring device or reflector is attached to the moving object and the reflector/sensor to the fixed remote station in such a way that the reflector always remains within the visual field of the sensor. This can be done using the light spot of the laser diode, which is still clearly visible on the reflecting foil even at long distance.
The size of the reflecting foil must be such that the light spot cannot be displaced from the reflector by vibrations. The device comes with a reflecting foil measuring 20 x 20 [cm], but other sizes can be ordered on request.
Once the laser measuring device is optimally aligned with the reflecting foil, the switching output "Intensity below minimum" is reset. If the PC program "EPROG" is active, the intensity display under "Actual values" should not be below minimum.

Note:
Reflecting foils by other manufacturers should not be used under any circumstances, as all the information in the data sheets refer to the foil already supplied with the device.

TR ELECTRONIC GmbH
Eglishalde 6
D-78647 Trossingen
Tel. +49 - (0) 74 25 / 228 - 0
Fax +49 - (0) 74 25 / 228 - 33
Germany

Laser Measuring Device LE-100 SSI

EPROG

- **Robust**
- **Measurement of Linear Movement**
- **Non Contact Distance Measurement**
- **Measuring Distance Up To 100 m**
- **Programmable**
- **SSI-Interface (Synchronous-Serial Interface)**

Electrical Data

Measurement Principle	Phase shift measurement
Range (LE100 to Reflector)	0.2 to 100 m
Resolution	0.5 mm
Supply Voltage	18-27 V DC ± 5 %
Power Dissipation (No Load)	< 6 Watt
Light Source	Laser Diode (Red Light)
Wave Length λ	670 nm
Maximum Laser Power	P ≤ 1 mW
Laser Protection Class	2 (IEC 825)
Lifetime (25°C / 77° F)	50 000 h
Light Receiver	Photo Diode
Measurement Value Output	≥ 0,01 mm
Measurement Value Output / Cycle Time	1000 values per second
Programmable via RS485	PC IBM compatible EPROG software
* Output Code	Binary, Gray
Clock Input	Opto Coupler Isolated
Clock Frequency	95 kHz - 1 MHz
Transmission Cable Length	Dependent on Cable Cross Section, Shielding, Clock Frequency etc.…
Data Output	RS422 (2 wire)
* Output Format	Standard, with Repetition
Repeatability	± 2 mm
Input Options	
* Preset 1	Adjust absolute position to a given set value (i.e. zero set)
Logic Levels	"0" < + 2 VDC, "1" > + 8 VDC, max. 30 VDC
Pin Configuration	Upon Request
* Programmable Parameters	

Environmental Data

Electromagnetic compatibility	EN 61000-4-2 (IEC-801-2) / EN 61000-4-4 (IEC-801-4)
Operating Temperature	0° to 50°C (32° F to 122° F)
Storage temperature range	-20° to 75°C (- 4° F to 167° F)
Relative Humidity	98 % (non condensing)
* Protection Class	IP 65 (DIN 40 050)

* The protection class of the device can be effected by the type of cable and connector used.

Changes reserved

TR ELECTRONIC GmbH
Eglishalde 6
D-78647 Trossingen
Tel. +49 - (0) 74 25 / 228 - 0
Fax +49 - (0) 74 25 / 228 - 33
Germany

Mechanical Data

Vibration (50-2000 Hz Sinusoidal)	DIN IEC 68-2-6
Shock (11ms)	DIN IEC 68-2-27
Mechanical Special Types	Upon Request
* Standard Connector	12pin Contact Connector

Dimension drawing

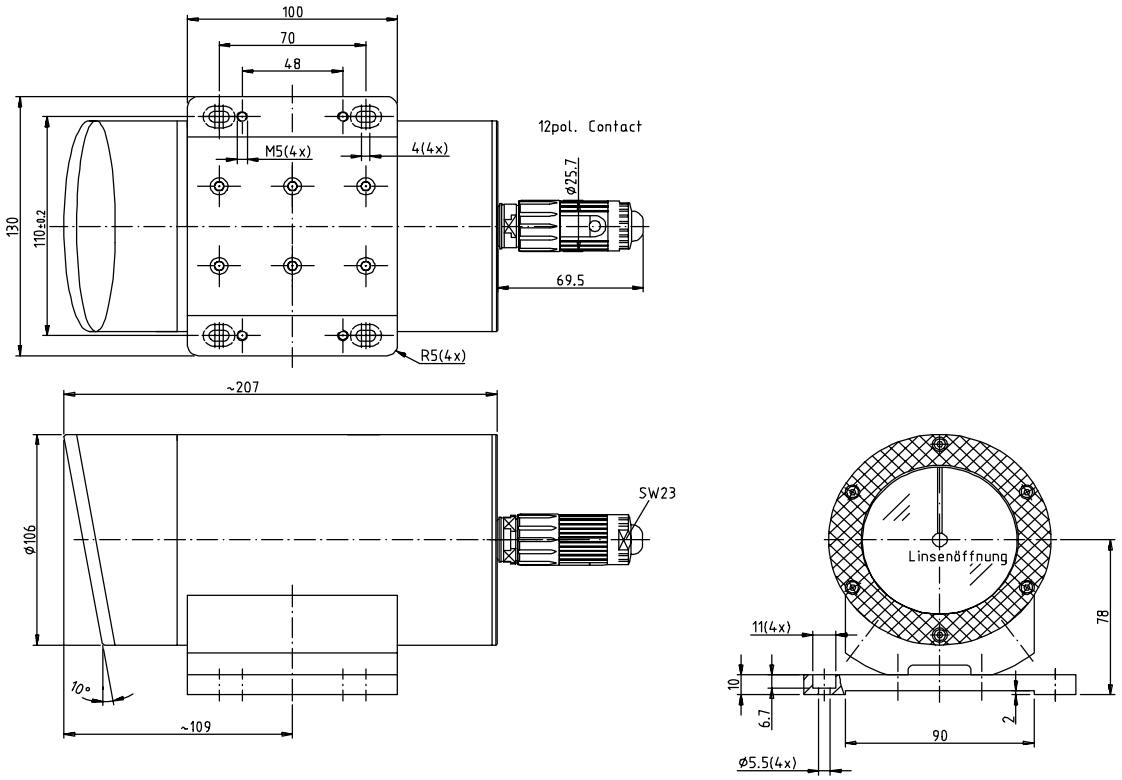

Changes reserved

TR ELECTRONIC GmbH

Eglishalde 6
D-78647 Trossingen
Tel. +49 - (0) 74 25 / 228 - 0
Fax +49 - (0) 74 25 / 228 - 33
Germany

Laser Measuring Device LE-100 IBS

VIA BUS/ EPROG

- **Robust**
- **Measurement of Linear Movement**
- **Non Contact Distance Measurement**
- **Measuring Distance Up To 100 m**
- **Interface : INTERBUS-S**
- **Programmable via Interbus-S**

8

Electrical Data

Measurement Principle	Phase shift measurement
Range (LE100 to Reflector)	0.2 to 100 m
Resolution	0.5 mm
Supply Voltage	18-27 V DC ± 5 %, 24 V DC ± 5 % (device with heating)
Power Dissipation (No Load)	< 6 Watt, < 60 Watt (device with heating)
Light Source	Laser Diode (Red Light)
Wave Length λ	670 nm
Maximum Laser Power	P ≤ 1 mW
Laser Protection Class	2 (IEC 825)
Lifetime (25°C / 77° F)	50 000 h
Light Receiver	Photo Diode
Measurement Value Output	≥ 0,001 mm
Measurement Value Output / Cycle Time	1000 values per second
Reproduction	± 2 mm
Programmable via RS485	PC IBM compatible EPROG software / INTERBUS-S
Interbus-S Interface:	Interbus-S according to DIN 19258, Two-wire remote bus for transmission and receive direction, RS422 with galvanic isolation
Profile:	K3
Ident-No.:	55 dec.
Number of words:	2 IN / 2 OUT
Baud rate:	300 kbps net, 500 kbps gross (including control and status bytes)
Data refresh:	0,5 ms
Output code:	Binary
Special features:	Programming the following parameters via the INTERBUS-S: - Resolution, - Preset preselection, - Measuring initial value, - Counting direction, Error value, - Preset releasing

Environmental Data

Electromagnetic compatibility	EN 61000-4-2 (IEC-801-2) / EN 61000-4-4 (IEC-801-4)
Operating Temperature	0° to 50°C (32° F to 122° F), -30° to +50°C (device with heating)
Thermal drift	1 ppm / °C
Storage temperature range	-20° to 75°C (- 4° F to 167° F)
Relative Humidity	98 % (non condensing)
* Protection Class	IP 65 (DIN 40 050)

* The protection class of the device can be effected by the type of cable and connector used.

Changes reserved

TR ELECTRONIC GmbH

Eglishalde 6
D-78647 Trossingen
Tel. +49 - (0) 74 25 / 228 - 0
Fax +49 - (0) 74 25 / 228 - 33
Germany

Laser Measuring Device LE-100 IBS

Mechanical Data

Vibration (50-2000 Hz Sinusoidal)	DIN IEC 68-2-6
Shock (11ms)	DIN IEC 68-2-27
Mechanical Special Types	Upon Request
Connection	Screw Terminals, 3 x PG 9

Dimension drawing

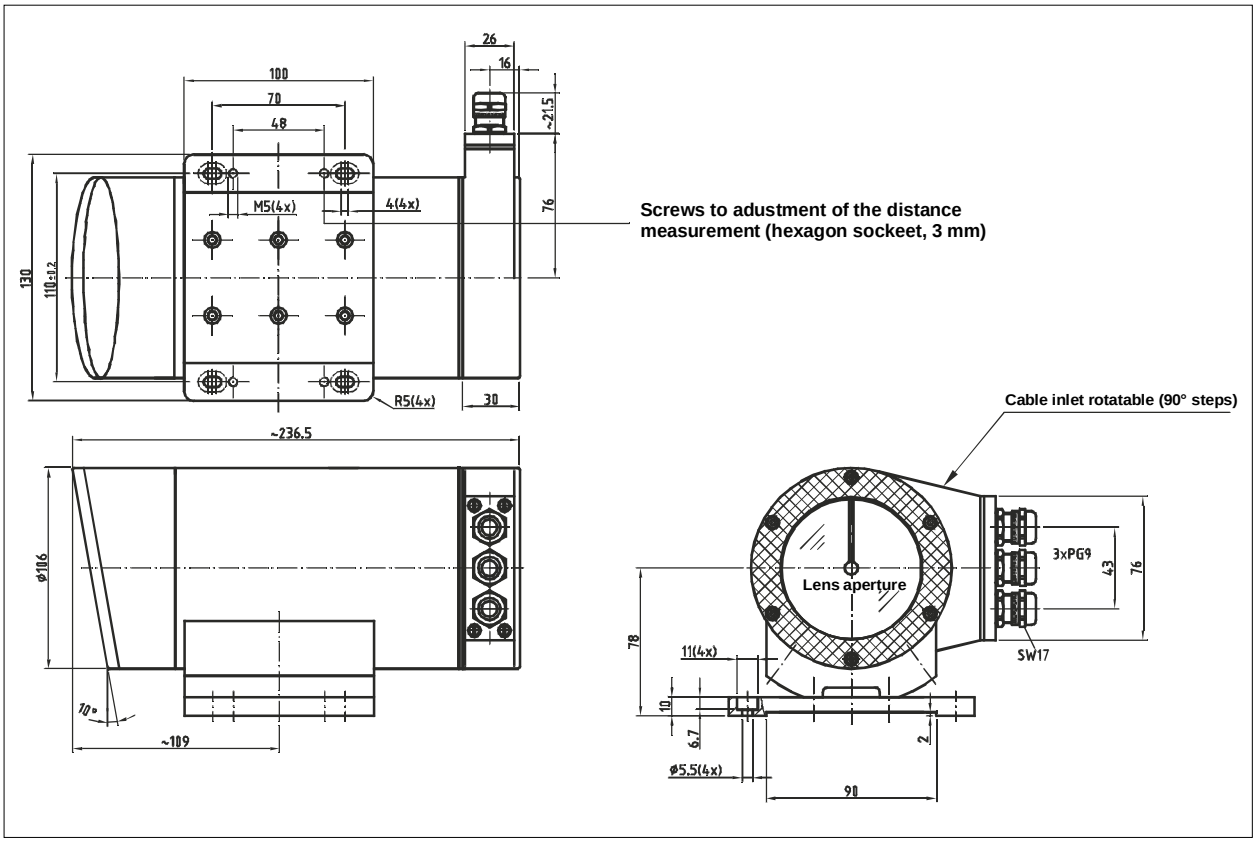

Changes reserved

Laser Measuring Device LE-100 DeviceNet

Eglishalde 6
D-78647 Trossingen
Tel. +49 - (0) 74 25 / 228 - 0
Fax +49 - (0) 74 25 / 228 - 33
Germany

VIA BUS

- **Robust**
- **Measurement of Linear Movement**
- **Non Contact Distance Measurement**
- **Measuring Distance Up To 100 m**
- **Interface : CAN-DeviceNet**
- **Programmable via CAN-Bus**

Electrical Data

Measurement Principle	Phase shift measurement
Range (LE100 to Reflector)	0.2 to 100 m
Resolution	0.5 mm
Supply Voltage	18-27 V DC ± 5 %, 24 V DC ± 5 % (device with heating)
Power Dissipation (No Load)	< 6 Watt, < 60 Watt (device with heating)
Light Source	Laser Diode (Red Light)
Wave Length λ	670 nm
Maximum Laser Power	P ≤ 1 mW
Laser Protection Class	2 (IEC 825)
Lifetime (25°C / 77° F)	50 000 h
Light Receiver	Photo Diode
Measurement Value Output	≥ 0,001 mm
Measurement Value Output / Cycle Time	800 values per second
Reproduction	± 2 mm
CAN-DeviceNet Interface	CAN-Fieldbus-Interface (opto-isolated) / CAN-BUS-Driver (ISO/DIS 11898)
Baud rate (adjustable)	125 kbaud, line length up to 500 m 250 kbaud, line length up to 250 m 500 kbaud, line length up to 100 m
Output code	Binary
Special features	Programming of following parameters via the CAN-Bus: - Direction of Counting - Clear Preset - Step-Length - Error value - Preset - Preset-Adjustment

Environmental Data

Electromagnetic compatibility	EN 61000-4-2 (IEC-801-2) / EN 61000-4-4 (IEC-801-4)
Operating Temperature	0° to 50°C (32° F to 122° F), -30° to +50°C (device with heating)
Thermal drift	1 ppm / °C
Storage temperature range	-20° to 75°C (- 4° F to 167° F)
Relative Humidity	98 % (non condensing)
* Protection Class	IP 65 (DIN 40 050)

* The protection class of the device can be effected by the type of cable and connector used.

Changes reserved

Eglishalde 6
D-78647 Trossingen
Tel. +49 - (0) 74 25 / 228 - 0
Fax +49 - (0) 74 25 / 228 - 33
Germany

Mechanical Data

Vibration (50-2000 Hz Sinusoidal)	DIN IEC 68-2-6
Shock (11ms)	DIN IEC 68-2-27
Mechanical Special Types	Upon Request
Connection	Screw Terminals, 3 x PG 9

Dimension drawing

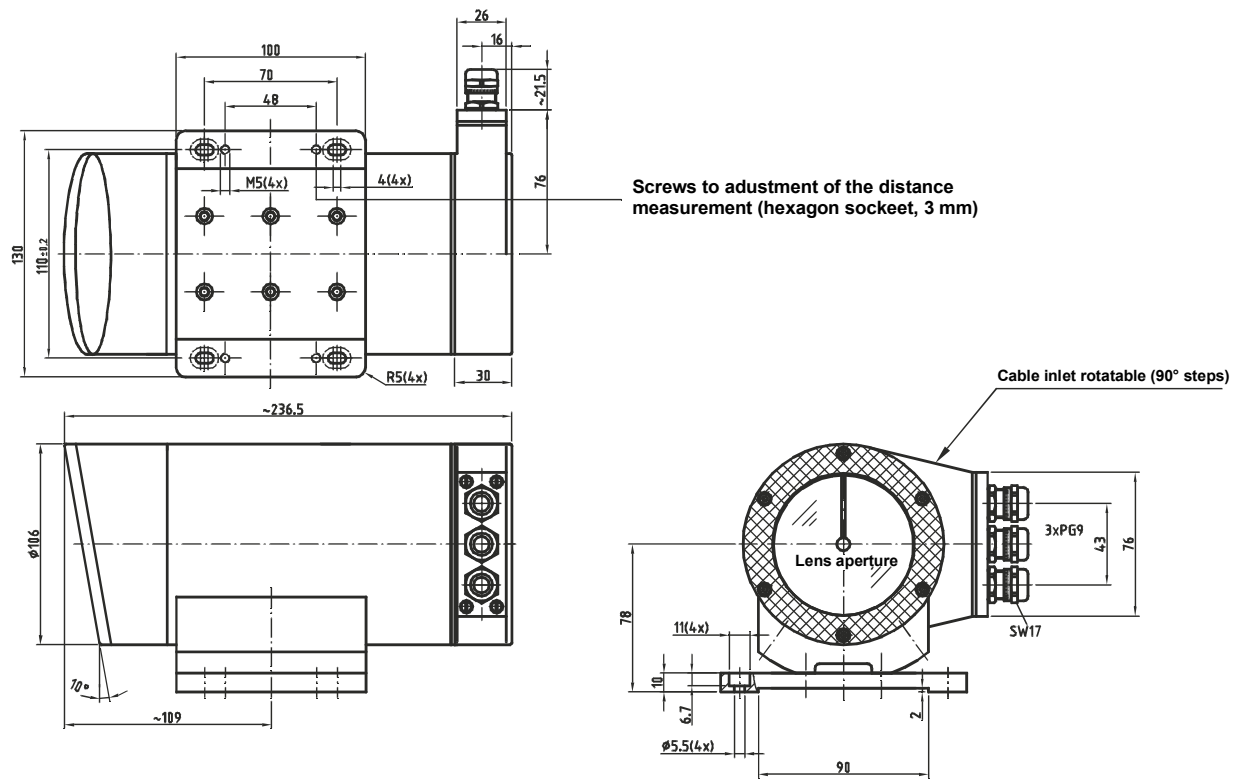

Changes reserved

TR ELECTRONIC GmbH

Eglishalde 6
D-78647 Trossingen
Tel. +49 - (0) 74 25 / 228 - 0
Fax +49 - (0) 74 25 / 228 - 33
Germany

Laser Measuring Device LE-100 CANopen

VIA BUS

- **Robust**
- **Measurement of Linear Movement**
- **Non Contact Distance Measurement**
- **Measuring Distance Up To 100 m**
- **Interface : CANopen**
- **Programmable via CAN-Bus**

8

Electrical Data

Measurement Principle	Phase shift measurement
Range (LE100 to Reflector)	0.2 to 100 m
Resolution	0.5 mm
Supply Voltage	18-27 V DC ± 5 %, 24 V DC ± 5 % (device with heating)
Power Dissipation (No Load)	< 6 Watt, < 60 Watt (device with heating)
Light Source	Laser Diode (Red Light)
Wave Length λ	670 nm
Maximum Laser Power	P ≤ 1 mW
Laser Protection Class	2 (IEC 825)
Lifetime (25°C / 77° F)	50 000 h
Light Receiver	Photo Diode
Measurement Value Output	≥ 0,001 mm
Measurement Value Output / Cycle Time	800 values per second
Reproduction	± 2 mm
Programmable via CAN-Bus	CAN-Bus-Interface (ISO/DIS 11898)
Data Protocol	CAN 2.0 A, CANopen Device Profil for Encoder CIA DS-406 V2.0 / PCA 82 C250 / C251
Output Code	Binär
Baud Rate (adjustable by switch)	20 kbaud, line length up to 2500 m / 125 kbaud, line length up to 500 m 500 kbaud, line length up to 100 m / 1 Mbaud, line length up to 25 m
Special features	Programming of following parameters via the CAN-Bus: - Direction of Counting - Clear Preset - Step-Length - Error value - Preset-Adjustment - Sending the position values cyclicly

Environmental Data

Electromagnetic compatibility	EN 61000-4-2 (IEC-801-2) / EN 61000-4-4 (IEC-801-4)
Operating Temperature	0° to 50°C (32° F to 122° F), -30° to +50°C (device with heating)
Thermal drift	1 ppm / °C
Storage temperature range	-20° to 75°C (- 4° F to 167° F)
Relative Humidity	98 % (non condensing)
* Protection Class	IP 65 (DIN 40 050)

* The protection class of the device can be effected by the type of cable and connector used.

Changes reserved

Eglishalde 6
D-78647 Trossingen
Tel. +49 - (0) 74 25 / 228 - 0
Fax +49 - (0) 74 25 / 228 - 33
Germany

Mechanical Data

Vibration (50-2000 Hz Sinusoidal)	DIN IEC 68-2-6
Shock (11ms)	DIN IEC 68-2-27
Mechanical Special Types	Upon Request
Connection	Screw Terminals, 3 x PG 9

Dimension drawing

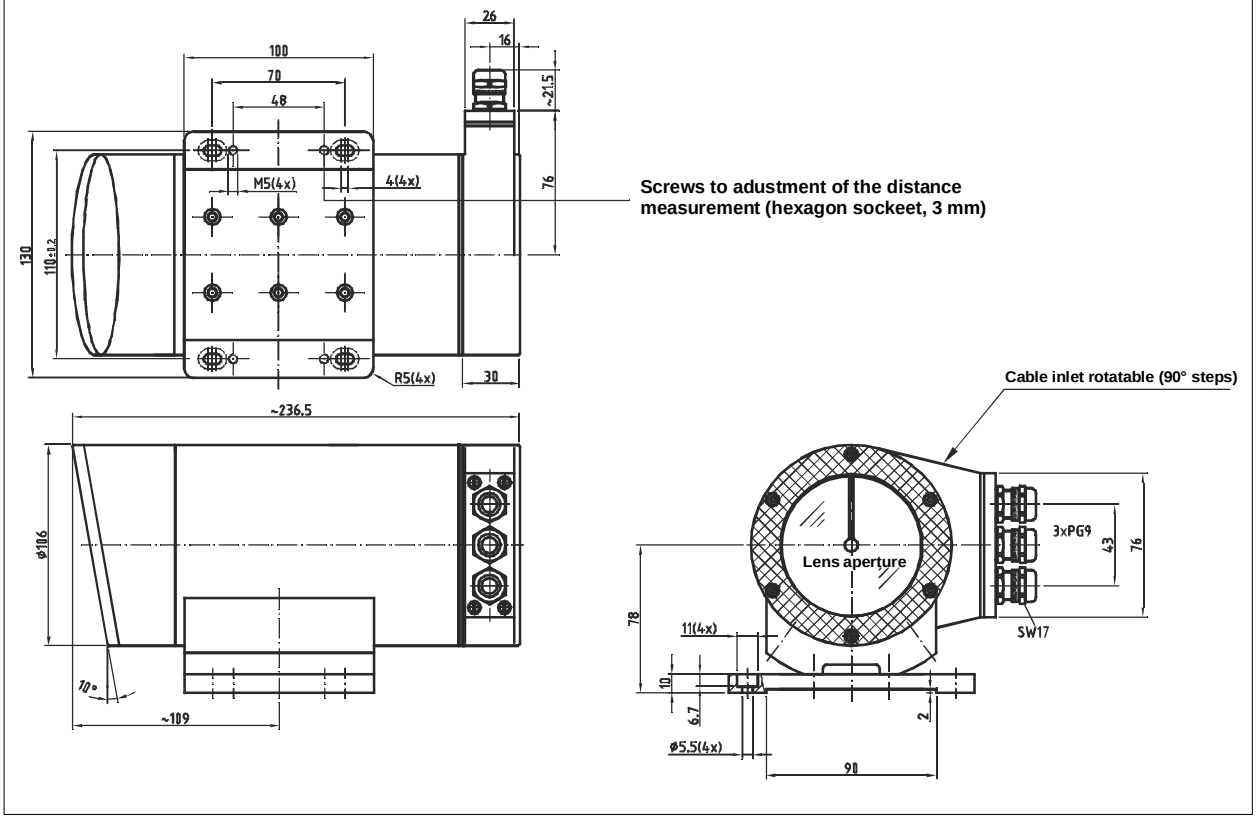

Changes reserved

Laser Measuring Device LE-100 Profibus (PNO)

Eglishalde 6
D-78647 Trossingen
Tel. +49 - (0) 74 25 / 228 - 0
Fax +49 - (0) 74 25 / 228 - 33
Germany

VIA BUS/ EPROG

- **Robust**
- **Measurement of Linear Movement**
- **Non Contact Distance Measurement**
- **Measuring Distance Up To 100 m**
- **Interface : Profibus-DP**
- **Parametrizable via PROFIBUS, according to PNO-profile CLASS2**

Electrical Data

Measurement Principle	Phase shift measurement
Range (LE100 to Reflector)	0.2 to 100 m
Resolution	0.5 mm
Supply Voltage	18-27 V DC ± 5 %, 24 V DC ± 5 % (device with heating)
Power Dissipation (No Load)	< 6 Watt, < 60 Watt (device with heating)
Light Source	Laser Diode (Red Light)
Wave Length λ	670 nm
Maximum Laser Power	P ≤ 1 mW
Laser Protection Class	2 (IEC 825)
Lifetime (25°C / 77° F)	50 000 h
Light Receiver	Photo Diode
Measurement Value Output	≥ 0,001 mm
Measurement Value Output / Cycle Time	1000 values per second
Reproduction	± 2 mm
Programmable via RS485	PC IBM compatible EPROG software / Profibus-DP
Profibus-DP Interface:	PROFIBUS-DP acc. to DIN 19245 Part 1-3
Output code:	Binary
Baud rate:	9,6 kBaud to max. 12 Mbaud
Special features:	Programming is performed via the parameterization message at the start-up of the encoder or PROFIBUS-DP master
Station addresses:	3 – 99
Inputs	
Preset 1	Electronic adjustment
Logic Levels	"0" < + 2 V DC, "1" > + 8 V DC, max. 30 V DC
Pin Configuration	Upon Request

Environmental Data

Electromagnetic compatibility	EN 61000-4-2 (IEC-801-2) / EN 61000-4-4 (IEC-801-4)
Operating Temperature	0° to 50°C (32° F to 122° F), -30° to +50°C (device with heating)
Thermal drift	1 ppm / °C
Storage temperature range	-20° to 75°C (- 4° F to 167° F)
Relative Humidity	98 % (non condensing)
* Protection Class	IP 65 (DIN 40 050)

* The protection class of the device can be effected by the type of cable and connector used.

Changes reserved

Eglishalde 6
D-78647 Trossingen
Tel. +49 - (0) 74 25 / 228 - 0
Fax +49 - (0) 74 25 / 228 - 33
Germany

Mechanical Data

Vibration (50-2000 Hz Sinusoidal)	DIN IEC 68-2-6
Shock (11ms)	DIN IEC 68-2-27
Mechanical Special Types	Upon Request
Connection	Screw Terminals, 3 x PG 9

Dimension drawing

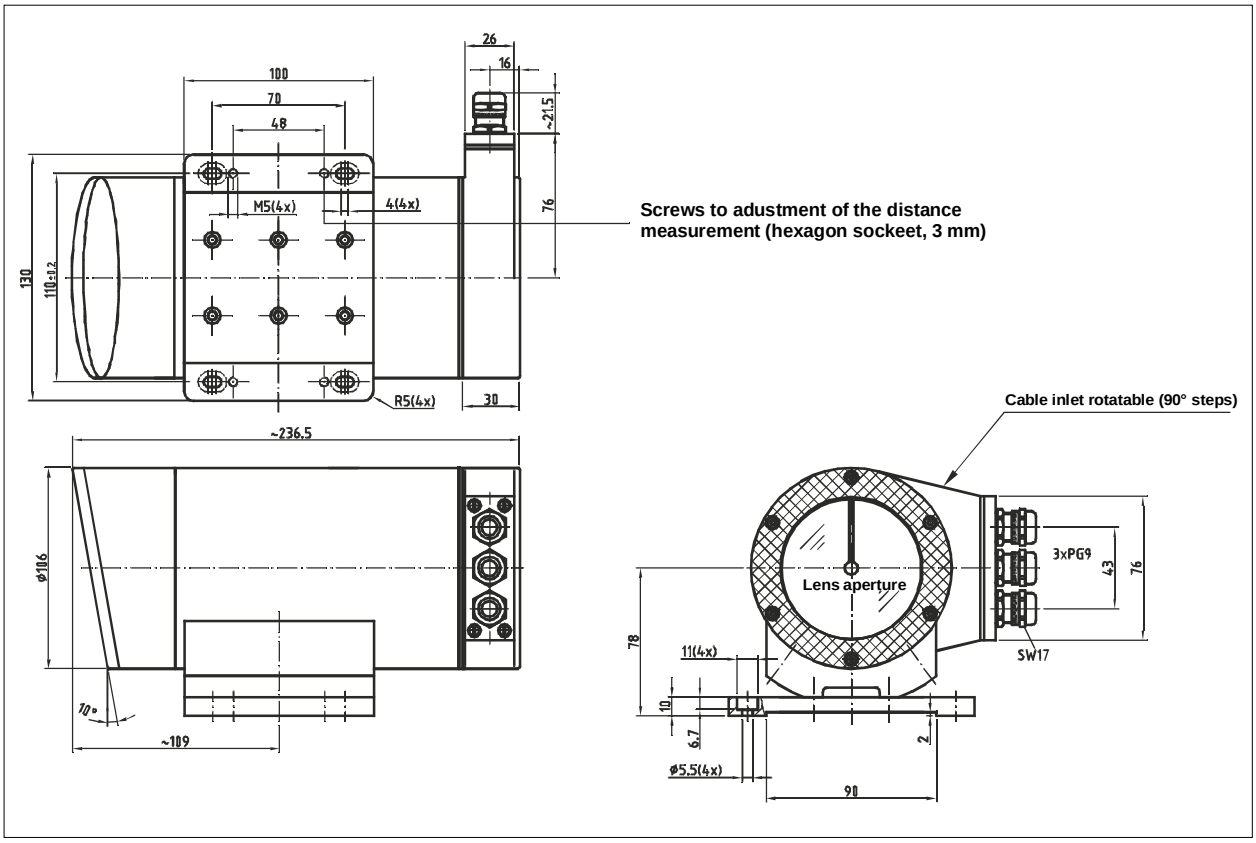

Changes reserved

TR ELECTRONIC GmbH
Eglishalde 6
D-78647 Trossingen
Tel. +49 - (0) 74 25 / 228 - 0
Fax +49 - (0) 74 25 / 228 - 33
http://www.tr-electronic.de
Germany

Laser Measuring Device LE-200 SSI

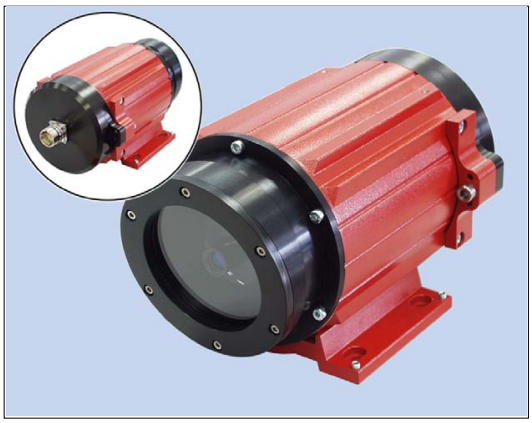

- **Robust**
- **Measurement of Linear Movement**
- **Non Contact Distance Measurement**
- **Measuring Distance Up To 125m, 170m, 195m**
- **Porgrammable**
- **SSI-Interface (Synchronous-Serial Interface)**

Electrical Data

Measurement Principle	Phase shift measurement
Range (LE-200 to Reflector)	0.2 – 125 m standard, 170m, 195m (special devices)
* Resolution	selectable, physical resolution 0.7 mm
Linearisation	
up to 12m (standard)	absolute linearity error ±3 mm
complete measuring length	absolute linearity error ±5 mm
Supply Voltage	18-27 V DC ± 5 %, 24 V DC ± 5 % (device with heating)
Power Dissipation (No Load)	< 6 Watt, < 60 Watt (device with heating)
Light Source	Laser Diode (Red Light)
Wave Length λ	670 nm
Maximum Laser Power	P ≤ 1 mW
Laser Protection Class	2 according to DIN EN 60 825-1: 2001-11
Average Lifetime (25°C / 77° F)	50 000 h
Measurement Value Output / Cycle Time	1000 values per second
Integration Time	1 ms
Reproduction	± 2 mm
Programmable via RS485	PC IBM compatible (TRWinProg software)
SSI-Interface:	Clock input: Opto Coupler isolated / Clock frequency: 80 kHz - 820 kHz
* Output Code:	Binary, Gray
* SSI Output Value	Position, Intensity, Speed
Cable Length	Dependent on cable cross section, shielding, clock frequency etc.
Data Output	RS422 (2-wire)
* Number of data bits	24 - 26, with error bit transmission (temperature, intensity, hardware)
* Switching input / Switching output	
Levels switching input	1-level > +8V, 0-level < +2V, up to ±35V, 5 kOhm
Levels switching output	1-level > US-2V, 0-level < 1 V, up to 100mA
Pin Configuration	Upon Request

* programmable parameter

Environmental Data

Electromagnetic compatibility	EN 61000-4-2 (IEC-801-2) / EN 61000-4-4 (IEC-801-4)
Operating Temperature	0° to 50°C (32° F to 122° F), -30° to +50°C (device with heating)
Thermal drift	1 ppm / °C, related to the max. measuring length of 125 m, 170 m or 195 m
Storage temperature range	-20° to 75°C (- 4° F to 167° F)
Relative Humidity	98 % (non condensing)
* Protection Class	IP 65 (DIN 40 050)

* The protection class is valid for the device with a screwed-on mating connector and screwed-together cable gland.

Changes reserved

Eglishalde 6
D-78647 Trossingen
Tel. +49 - (0) 74 25 / 228 - 0
Fax +49 - (0) 74 25 / 228 - 33
http://www.tr-electronic.de
Germany

Mechanical Data

Vibration (50-2000 Hz Sinusoidal DIN IEC 68-2-6 ..... ≤ 50 m/s^2 (5g)
Shock (11ms) DIN IEC 68-2-27..... ≤ 300 m/s^2 (30g)
Mechanical Special Types ..... Upon Request
Connection ..... 12 pole Contact Bullet Connector, axial

Dimension drawing

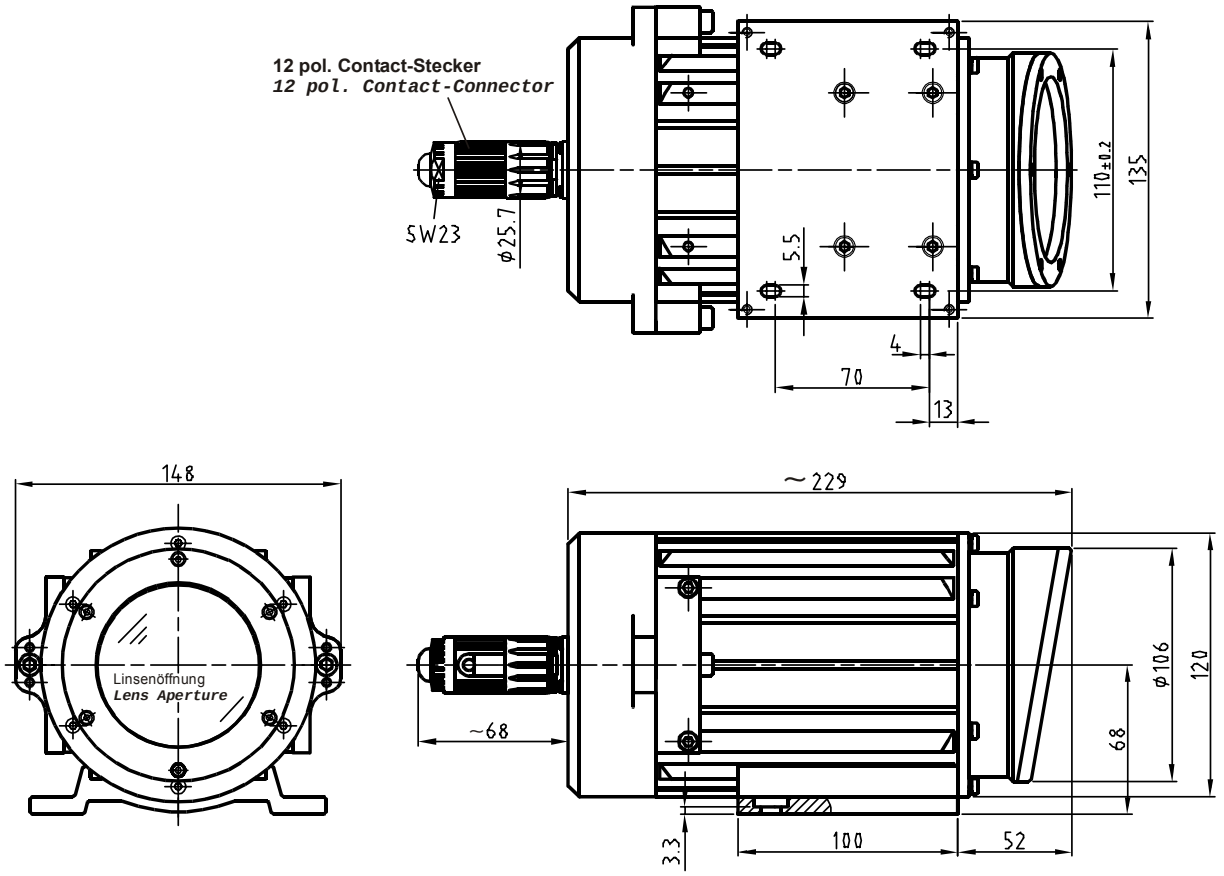

TR ELECTRONIC GmbH
Eglishalde 6
D-78647 Trossingen
Tel. +49 - (0) 74 25 / 228 - 0
Fax +49 - (0) 74 25 / 228 - 33
http://www.tr-electronic.de
Germany

Laser Measuring Device LE-200 Profibus (PNO)

VIA BUS/ TRWinProg

- **Robust**
- **Measurement of Linear Movement**
- **Non Contact Distance Measurement**
- **Measuring Distance Up To 125m, 170m, 195m**
- **Interface : Profibus-DP / Synchronous-Serial**
- **Parametrizable via PROFIBUS, according to PNO-profile CLASS2**

8

Electrical Data

Measurement Principle	Phase shift measurement
Range (LE-200 to Reflector)	0.2 – 125 m standard, 170m, 195m (special devices)
* Resolution	selectable, physical resolution 0.7 mm
Linearisation	
up to 12m (standard)	absolute linearity error ±3 mm
complete measuring length	absolute linearity error ±5 mm
Supply Voltage	18-27 V DC ± 5 %, 24 V DC ± 5 % (device with heating)
Power Dissipation (No Load)	< 6 Watt, < 60 Watt (device with heating)
Light Source	Laser Diode (Red Light) / Laser Protection Class 2 acc. to DIN EN 60 825-1: 2001-11
Wave Length λ	670 nm
Maximum Laser Power	P ≤ 1 mW
Lifetime (25°C / 77° F)	50 000 h
Measurement Value Output / Cycle Time	1000 values per second
Integration Time	1 ms
Reproduction	± 2 mm
Programmable via RS485	PC IBM compatible TRWinProg software / Profibus-DP
Profibus-DP Interface:	PROFIBUS-DP acc. to DIN 19245 Part 1-3
Output code:	Binary
Baud rate:	9,6 kBaud to max. 12 Mbaud
Special features:	Configuration is performed via the parameterization message at the start-up of the encoder or PROFIBUS-DP master
Station addresses:	3 – 99
SSI-Interface:	Clock input: Opto Coupler isolated / Clock frequency: 80 kHz - 820 kHz
* Output Code:	Binary, Gray
Cable Length	Dependent on cable cross section, shielding, clock frequency etc.
Data Output / * Number of data bits	RS485 (2-wire) / 24 - 26, with error bit transmission
* Switching input / Switching output	
Levels switching input	1-level > +8V, 0-level < +2V, up to ±35V, 5 kOhm
Levels switching output	1-level > US-2V, 0-level < 1 V, up to 100mA
Pin Configuration	Upon Request

* programmable parameter

Environmental Data

Electromagnetic compatibility	EN 61000-4-2 (IEC-801-2) / EN 61000-4-4 (IEC-801-4)
Operating Temperature	0° to 50°C (32° F to 122° F), -30° to +50°C (device with heating)
Thermal drift	1 ppm / °C, related to the max. measuring length of 125 m, 170 m or 195 m
Storage temperature range	-20° to 75°C (- 4° F to 167° F)
Relative Humidity	98 % (non condensing)
* Protection Class	IP 65 (DIN 40 050)

* The protection class is valid for the device with screwed-together cable glands.

Changes reserved

Eglishalde 6
D-78647 Trossingen
Tel. +49 - (0) 74 25 / 228 - 0
Fax +49 - (0) 74 25 / 228 - 33
http://www.tr-electronic.de
Germany

Mechanical Data

Vibration (50-2000 Hz Sinusoidal DIN IEC 68-2-6	≤ 50 m/s^2 (5g)
Shock (11ms) DIN IEC 68-2-27	≤ 300 m/s^2 (30g)
Mechanical Special Types	Upon Request
Connection	Screw Terminals, 4 x M16x1.5

Dimension drawing

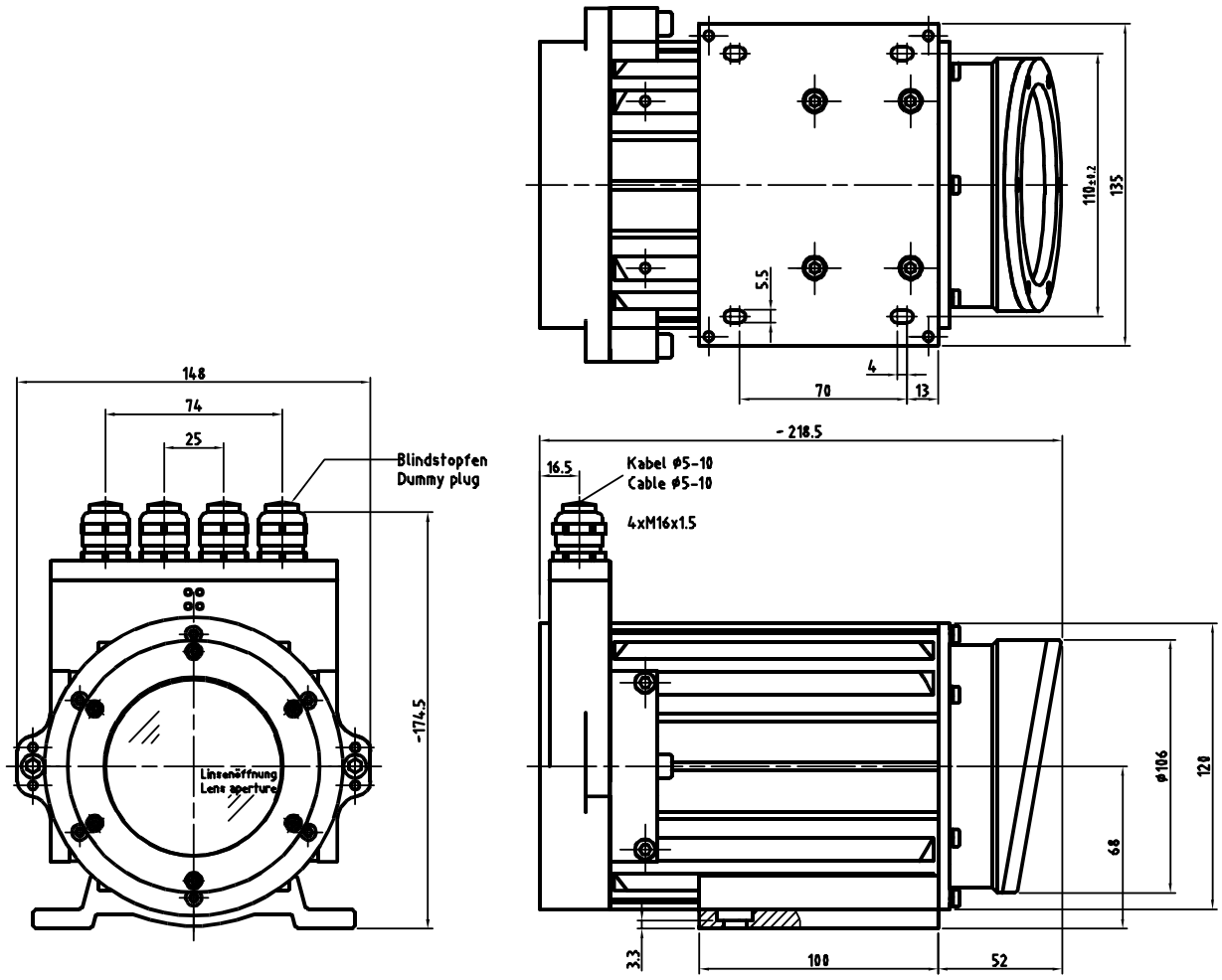

Changes reserved

TR ELECTRONIC GmbH
Eglishalde 6
D-78647 Trossingen
Tel. +49 - (0) 74 25 / 228 - 0
Fax +49 - (0) 74 25 / 228 - 33
http://www.tr-electronic.de
Germany

Laser Measuring Device LE-200 IBS

VIA BUS/ TRWinProg

- **Robust**
- **Measurement of Linear Movement**
- **Non Contact Distance Measurement**
- **Measuring Distance Up To 125m, 170m, 195m**
- **Interface : INTERBUS-S**
- **Programmable via Interbus-S**

8

Electrical Data

Measurement Principle	Phase shift measurement
Range (LE200 to Reflector)	0.2 – 125 m standard, 170m, 195m (special devices)
Resolution	selectable, physical resolution 0.7 mm
Linearisation	
up to 12m (standard)	absolute linearity error ±3 mm
complete measuring length	absolute linearity error ±5 mm
Supply Voltage	18-27 V DC ± 5 %, 24 V DC ± 5 % (device with heating)
Power Dissipation (No Load)	< 6 Watt, < 60 Watt (device with heating)
Light Source	Laser Diode (Red Light) / Laser Protection Class 2 acc. to DIN EN 60 825-1: 2001-11
Wave Length λ	670 nm
Maximum Laser Power	P ≤ 1 mW
Lifetime (25°C / 77° F)	50 000 h
Measurement Value Output / Cycle Time	1000 values per second
Integration Time	1 ms
Reproduction	± 2 mm
Programmable via RS485	PC IBM compatible TRWinProg software / INTERBUS-S
Interbus-S Interface:	Interbus-S according to DIN 19258, Two-wire remote bus for transmission and receive direction, RS422 with galvanic isolation
Profile:	K3
Ident-No.:	55 dec.
Number of words:	2 IN / 2 OUT
Baud rate:	300 kbps net, 500 kbps gross or 2000 kbps (including control and status bytes)
Data refresh:	0,5 ms
Output code:	Binary
Special features:	Configuration of the following parameters via the INTERBUS-S: - Resolution, - switch off or switch on Laser diode, - automatically, - Preset preselection, - Counting direction, - Error value, - Programming of the external switching input, - Clear Preset
Switching input / Switching output	
Levels switching input	1-level > +8V, 0-level < +2V, up to ±35V, 5 kOhm
Levels switching output	-level > US-2V, 0-level < 1 V, up to 100mA

Environmental Data

Electromagnetic compatibility	EN 61000-4-2 (IEC-801-2) / EN 61000-4-4 (IEC-801-4)
Operating Temperature	0° to 50°C (32° F to 122° F), -30° to +50°C (device with heating)
Thermal drift	1 ppm / °C, related to the max. measuring length of 125 m, 170 m or 195 m
Storage temperature range	-20° to 75°C (- 4° F to 167° F)
Relative Humidity	98 % (non condensing)
* Protection Class	IP 65 (DIN 40 050)

* The protection class is valid for the device with screwed-together cable glands.

Changes reserved

TR ELECTRONIC GmbH
Eglishalde 6
D-78647 Trossingen
Tel. +49 - (0) 74 25 / 228 - 0
Fax +49 - (0) 74 25 / 228 - 33
http://www.tr-electronic.de
Germany

Mechanical Data

Vibration (50-2000 Hz Sinusoidal DIN IEC 68-2-6	≤ 50 m/s^2 (5g)
Shock (11ms) DIN IEC 68-2-27	≤ 300 m/s^2 (30g)
Mechanical Special Types	Upon Request
Connection	Screw Terminals, 4 x M16x1.5

Dimension drawing

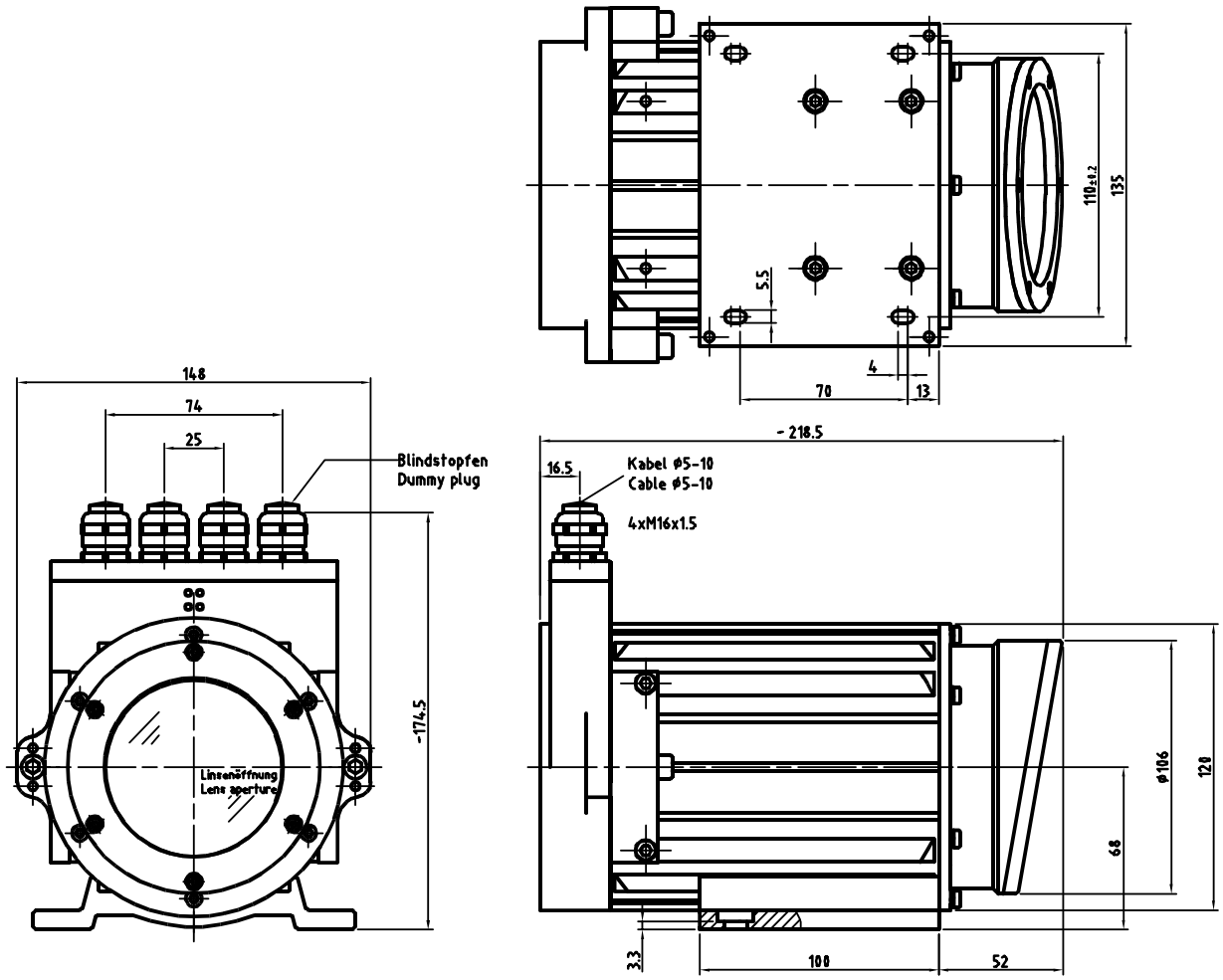

Changes reserved

TR ELECTRONIC GmbH
Eglishalde 6
D-78647 Trossingen
Tel. +49 - (0) 74 25 / 228 - 0
Fax +49 - (0) 74 25 / 228 - 33
http://www.tr-electronic.de
Germany

Laser Measuring Device LE-200 CAN DeviceNet

VIA BUS/ TRWinProg

- **Robust**
- **Measurement of Linear Movement**
- **Non Contact Distance Measurement**
- **Measuring Distance Up To 125m, 170m, 195m**
- **Interface: CAN DeviceNet**
- **Parameterizable via CAN-Bus**

Electrical Data

Measurement Principle	Phase shift measurement
Range (LE200 to Reflector)	0.2 – 125 m standard, 170m, 195m (special devices)
Resolution	selectable, physical resolution 0.7 mm
Linearisation	
up to 12m (standard)	absolute linearity error ±3 mm
complete measuring length	absolute linearity error ±5 mm
Supply Voltage	18-27 V DC ± 5 %, 24 V DC ± 5 % (device with heating)
Power Dissipation (No Load)	< 6 Watt, < 60 Watt (device with heating)
Light Source	Laser Diode (Red Light) / Laser Protection Class 2 acc. to DIN EN 60 825-1: 2001-11
Wave Length λ	670 nm
Maximum Laser Power	P ≤ 1 mW
Lifetime (25°C / 77° F)	50 000 h
Measurement Value Output / Cycle Time	1000 values per second
Integration Time	1 ms
Reproduction	± 2 mm
Programmable via RS485	PC IBM compatible TRWinProg software / CAN DeviceNet
CAN DeviceNet Interface	CAN-Fieldbus-Interface (opto-isolated) CAN-BUS-Driver (ISO/DIS 11898)
Baud rate (adjustable)	- 125 kbps, line length up to 500 m - 250 kbps, line length up to 250 m - 500 kbps, line length up to 100 m
Output code	Binary
Special features	Configuration of the following parameters via the CAN-Bus: - Direction of Counting, - Clear Preset, - Scaling, - Preset, - Preset-Adjustment, - Resolution, - Function ext. input, - Automatic error acknowledgement, - Function error output, - Output value in case of an error, - Output of the error status via the bus
Switching input / Switching output	
Levels switching input	1-level > +8V, 0-level < +2V, up to ±35V, 5 kOhm
Levels switching output	-level > US-2V, 0-level < 1 V, up to 100mA

Environmental Data

Electromagnetic compatibility	EN 61000-4-2 (IEC-801-2) / EN 61000-4-4 (IEC-801-4)
Operating Temperature	0° to 50°C (32° F to 122° F), -30° to +50°C (device with heating)
Thermal drift	1 ppm / °C, related to the max. measuring length of 125 m, 170 m or 195 m
Storage temperature range	-20° to 75°C (- 4° F to 167° F)
Relative Humidity	98 % (non condensing)
* Protection Class	IP 65 (DIN 40 050)

* The protection class is valid for the device with screwed-together cable glands.

Changes reserved

Eglishalde 6
D-78647 Trossingen
Tel. +49 - (0) 74 25 / 228 - 0
Fax +49 - (0) 74 25 / 228 - 33
http://www.tr-electronic.de
Germany

Mechanical Data

Vibration (50-2000 Hz Sinusoidal DIN IEC 68-2-6	≤ 50 m/s^2 (5g)
Shock (11ms) DIN IEC 68-2-27	≤ 300 m/s^2 (30g)
Mechanical Special Types	Upon Request
Connection	Screw Terminals, Cable Screw Gland 4 x M16 x 1.5

Dimension drawing

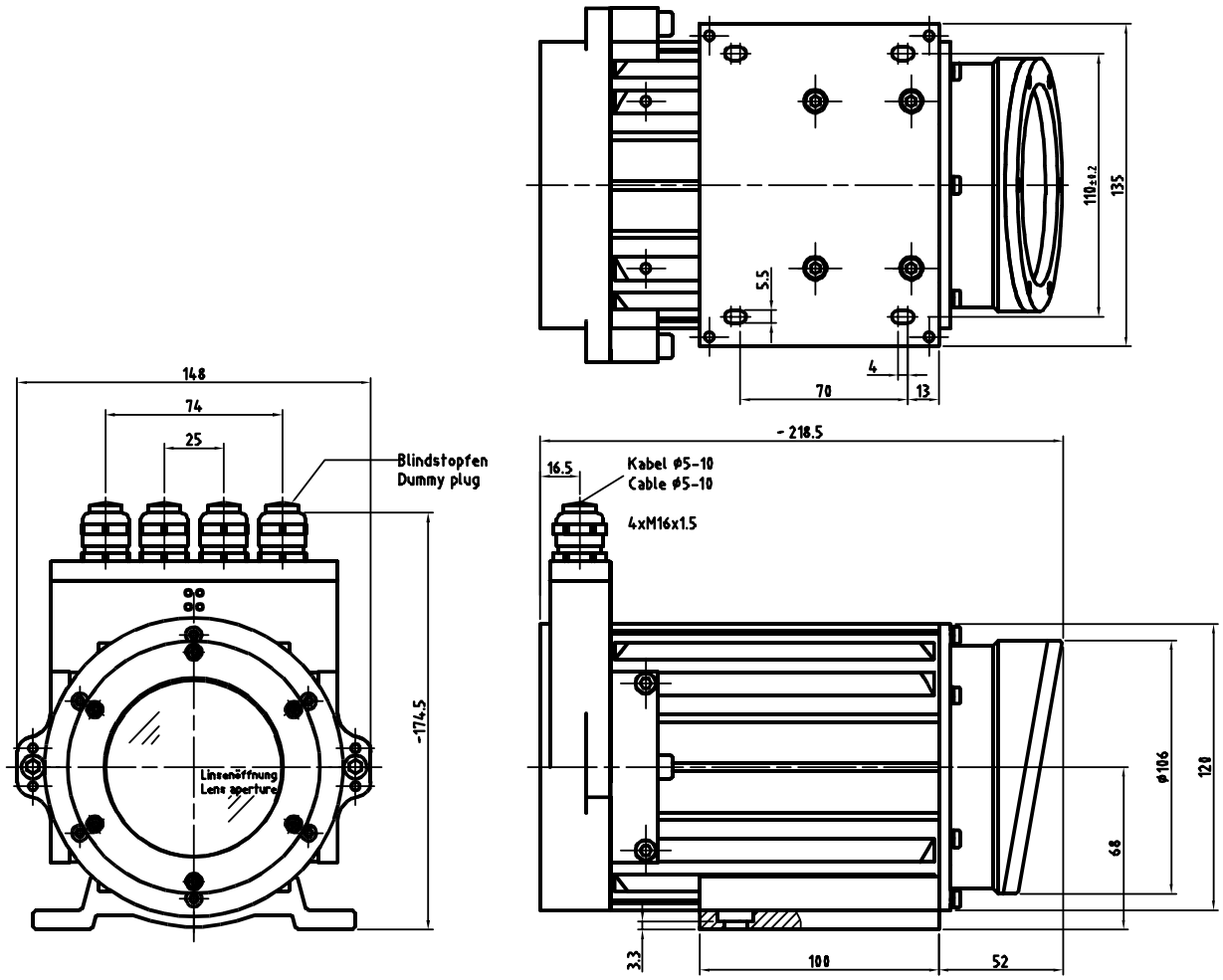

Changes reserved

TR ELECTRONIC GmbH
Eglishalde 6
D-78647 Trossingen
Tel. +49 - (0) 74 25 / 228 - 0
Fax +49 - (0) 74 25 / 228 - 33
http://www.tr-electronic.de
Germany

Laser Measuring Device LE-200 CANopen

VIA BUS/ TRWinProg

- **Robust**
- **Measurement of Linear Movement**
- **Non Contact Distance Measurement**
- **Measuring Distance Up To 125m, 170m, 195m**
- **Interface: CANopen**
- **Parameterizable via CAN-Bus**

8

Electrical Data

Measurement Principle	Phase shift measurement
Range (LE200 to Reflector)	0.2 – 125 m standard, 170m, 195m (special devices)
Resolution	selectable, physical resolution 0.7 mm
Linearisation	
up to 12m (standard)	absolute linearity error ±3 mm
complete measuring length	absolute linearity error ±5 mm
Supply Voltage	18-27 V DC ± 5 %, 24 V DC ± 5 % (device with heating)
Power Dissipation (No Load)	< 6 Watt, < 60 Watt (device with heating)
Light Source	Laser Diode (Red Light) / Laser Protection Class 2 acc. to DIN EN 60 825-1: 2001-11
Wave Length λ	670 nm
Maximum Laser Power	P ≤ 1 mW
Lifetime (25°C / 77° F)	50 000 h
Measurement Value Output / Cycle Time	1000 values per second
Integration Time	1 ms
Reproduction	± 2 mm
Programmable via RS485	PC IBM compatible TRWinProg software / CANopen
CANopen Interface	CAN Bus Interface according to ISO/DIS 11898
Data protocol	CAN 2.0 A, CANopen Device Profile for Encoder CiA DS-406 V2.0
Output code	Binary
Baud rate (adjustable)	- 20 kbps, line length up to 2500 m - 125 kbps, line length up to 500 m - 500 kbps, line length up to 100 m - 1000 kbps, line length up to 25 m
Special features	Configuration of the following parameters via the CAN-Bus: - Preset value, - Clear Preset, - Output value in case of an error, - Function ext. input, - Automatic error acknowledgement, - Function error output, - Switching functions, - Operating parameters, - Position value, - Measuring step, - Cyclic transmitting of the position values
Switching input / Switching output	
Levels switching input	1-level > +8V, 0-level < +2V, up to ±35V, 5 kOhm
Levels switching output	-level > US-2V, 0-level < 1 V, up to 100mA

Environmental Data

Electromagnetic compatibility	EN 61000-4-2 (IEC-801-2) / EN 61000-4-4 (IEC-801-4)
Operating Temperature	0° to 50°C (32° F to 122° F), -30° to +50°C (device with heating)
Thermal drift	1 ppm / °C, related to the max. measuring length of 125 m, 170 m or 195 m
Storage temperature range	-20° to 75°C (- 4° F to 167° F)
Relative Humidity	98 % (non condensing)
* Protection Class	IP 65 (DIN 40 050)

* The protection class is valid for the device with screwed-together cable glands.

Changes reserved

Eglishalde 6
D-78647 Trossingen
Tel. +49 - (0) 74 25 / 228 - 0
Fax +49 - (0) 74 25 / 228 - 33
http://www.tr-electronic.de
Germany

Mechanical Data

Vibration (50-2000 Hz Sinusoidal DIN IEC 68-2-6	≤ 50 m/s^2 (5g)
Shock (11ms) DIN IEC 68-2-27	≤ 300 m/s^2 (30g)
Mechanical Special Types	Upon Request
Connection	Screw Terminals, Cable Screw Gland 4 x M16 x 1.5

Dimension drawing

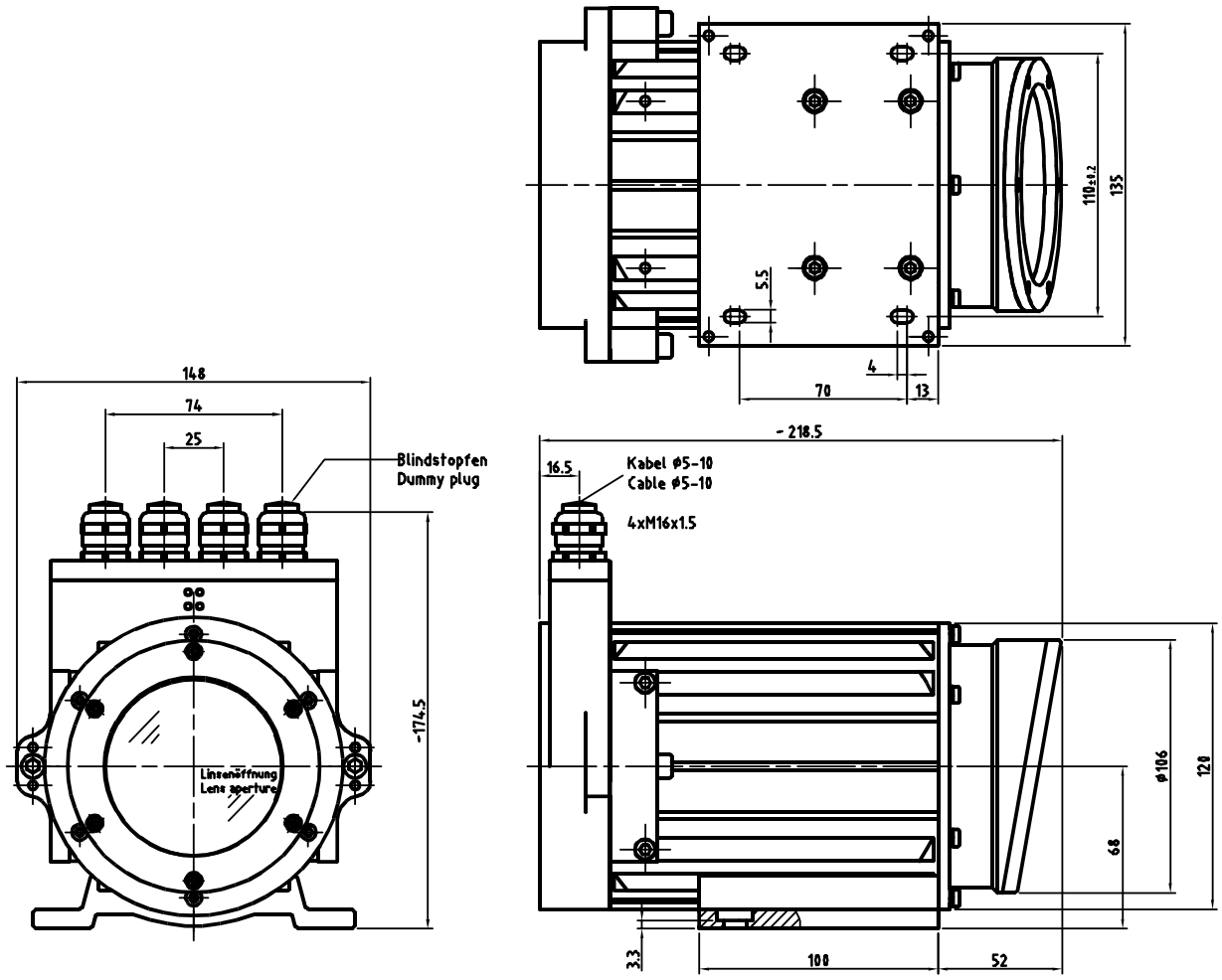

Changes reserved